NATIONAL ENGINEERING COLLEGE
(AN AUTONOMOUS INSTITUTION)
K.R.NAGAR,KOVILPATTI-628503.

EEE NEWSLETTER

NOVEMBER 2018
Volume 6 Issue 3

DEPARTMENT OF ELECTRICAL AND ELECTRONICS ENGINEERING

Hi colleagues,

"Necessity is the mother of Invention"

Initiation, Inspiration, Inventions, Innovations and Challenges are never ending programs of the universe. Every investigation big or small counts but always begins with a single step.

EEEians, the 'Evergreen' all rounder engineers have immense potential within them. This potential can be transformed into academic and research activities by waking up their minds.

"The Archer is known for his ability but not for his Arrow..!"

It gives me immense satisfaction that next issue of the EEE Newsletter is ready for the readers. A Newsletter mirrors the success story of an institution and act as a great medium to reach out to the outer world. It reflects upon the persistent and committed efforts made by faculties and students for taking the institution one step ahead. We do hope that we will come up to the expectations of our readers. Your constructive suggestions are always solicited.

By
D.R.DIVYA,
Final year EEE – A.

CONTENTS

Staff Activities/Publications/Achievements……. 04

Department Activities…….. 06

Tesla 2k18 – Intra College Technical Symposium……..... 06

Instrument Society of India – Tech Quest…..……..... 11

Special Interest Group……... 12

ETAP Training Programme…..……..... 16

Mini Project Forum……... 17

A Hands on Training in Arduino……... 19

Social Awareness Cell……... 23

Alumni Interaction …… 24

Placement Details ……. 25

Experience in Facing Interviews..……. 27

GATE Corner…...……..…… 28

Time to Know our Alumni…… 31

Student Articles...……. 32

Technical Article By Staff Members.. …… 36

Student Achievements……..…… 37

STAFF ACTIVITIES/PUBLICATIONS/ACHIEVEMENTS

STAFF ACTIVITIES

S.No.	Name of the Staff	Events/Guest Lecture	Topic/Event	Date	College/ Industry
1.	Dr.M.Willjuice Iruthayarajan, Prof & HOD/ EEE	GIAN Course	Practical PID Control	08.10.2018 to 12.10.2018	Madras Institute of Technology, Chennai.
2.	Mr. P. Samuel Pakianathan AP/ EEE	AICTE sponsored STC	Introduction to Smart Materials with ”Energy Harvesting Application”	02.09.2018 to 07.09.2018	Indian Institute of Madras, Chennai
3.	Dr. N. B. Prakash, Asso. Prof/EEE Mr. B. Vigneshwaran, AP/EEE	TEQIP III sponsored FDP	Free/Open Source Software for AI and Machine Learning	01.10.2018 to 06.10.2018	Thiagarajar College of Engineering, Madurai
4.	Dr. L. Kalaivani, Prof/EEE Dr. R. V. Maheswari, Prof/EEE Mr. M. Gengaraj, AP/EEE	Industry Know-How		22.10.2018 to 26.10.2018	Enthu Technology solutions, Coimbatore.
5.	Dr. M. Ravindran Asso. Prof(SG)/EEE Mr. B. Venkatasamy, AP/EEE Mr. F. Antony Jeffrey Vaz, AP/EEE	Industry Know-How		30.10.2018 to 03.11.2018	ProGen Energy Solutions, Coimbatore.
6.	Mr. M. Bakrutheen, AP/EEE Mr. B. Vigneshwaran, AP/EEE Mr. K. Kumar, AP/EEE	Industry Know-How		19.11.2018 to 23.11.2018	Shree Abirami Enggineering Works, Chennai
7.	Ms.K.Gowthami, AP/EEE	Industry Know-How		19.11.2018 to 23.11.2018	JRM Technologies, Coimbatore
8.	Dr.M.P.E.Rajamani, AP(SG) Mr.S.Sankarakumar, AP(SG)/EEE	Industry Know-How		26.11.2018 to 30.11.2018	Easun - MR Tap Changers P Ltd, Chennai

PUBLICATIONS

1. **Mr.B.Vigneshwaran, Dr.M.Willjuice Iruthayarajan, Dr.R.V.Maheswari**, “***Recognition of Multiple Partial Discharge patterns by Multi-class SVM using Fractal Image processing technique***”, IET Science, Measurement & Technology, Volume 12, Issue 8, 2018 , p. 1031 - 1038, Impact Factor 1.336.
2. S. Vimal, **L. Kalaivani**, M. Kaliappan, A. Suresh, Xiao-Zhi Gao, R. Varatharajan, “***Development of secured data transmission using machine learning-based discrete-time partially observed Markov model and energy optimization in cognitive radio networks***”, Neural Comput & Applications, (2018). https://doi.org/10.1007/s00521-018-3788-3, **Impact Factor:** 4.213

ONLINE CERTIFICATIONS

COURSE ERA

Dr. M. Willjuice Iruthayarajan,
Prof & HOD/ EEE
Course Era Course: **Machine Learning**
University: **Stanford**

Mr. N. Sankar, AP/ EEE
Course Era Course: **Introduction to Power Electronics**
University: **Colorado**

NPTEL

Mr. P. Samuel Pakianathan, AP/EEE
Course: **Fundamentals of Electrical Engineering**
Elite

Mr. B. Vigneshwaran, AP/EEE
Course: **Recent Advances in Transmission Insulators**
Elite

Mr. F. Antony Jeffrey Vaz, AP/EEE
Course: **Joy of computing using Python**
Elite

Mr. N. Sankar, AP/EEE
Course: **Introduction to Smart Grids**

Mr. M. Bakrutheen, AP/EEE
Course: **Recent Advances in Transmission Insulators**
Top 1%+Gold+Elite

Mr. K. Kumar, AP/EEE
Course: **Recent Advances in Transmission Insulators**
Elite

Ms. A. M. Diffni Gomez, AP/EEE
Course: **Introduction to Research**
Elite
Course: **Recent Advances in Transmission Insulators**
Top 1%+ Gold+ Elite

R & D ACTIVITIES

1. **Dr.T.Bavisha, AP/EEE** was completed her **Doctorate in "*Characterization of Degraded Oil Impregnated Paper under Transient Overvoltages*,",** on 17.09.2018 under the supervision of **Dr. S. Usa, Prof/EEE at CEG Campus, Anna University**.

2. Anna University, Chennai has approved ***Dr. S.Senthil Kumar***, **AP (SG)/EEE** as **supervisor for Research** under the faculty of Electrical and Engineering. His areas of specialization are **Transformer oil, Condition Monitoring of HV power apparatus**.

DEPARTMENT ACTIVITIES

EEE ASSOCIATION – TESLA'2K18

The Department of Electrical and Electronics Engineering Association has conducted a one day ***Intra College Symposium TESLA2K18 on 18th September, 2018*** at our college assembly hall. The inaugural function starts by 10AM with the dignitaries **Dr.S.Shanmugavel**, Principal, **Dr.M.Willjuice Iruthayarajan**, HOD/EEE and **Dr.N.B.Prakash**, Associate Professor, EEE. The welcome address was delivered by Mr.C.V.Surya Kumar, Secretary, EEE Association. Presidential Address was given by Dr.S.Shanmugavel, Principal, NEC, Chief Guest was introduced by Mr.P.Siva Sankar, Joint Treasurer, EEE Association. Dr.S.Shanmugavel, Principal, honored the Chief Guest. The Chief guest **Er.R.Seeniammal, AEE/TNEB**, Virudhunagar delivers a valuable and fruitful talk and motivated the students to set their goals and work for their goals to achieve in their carrier. Dr.S.Shanmugavel, Principal, National Engineering College presented a Memento to the chief guest. Finally a video of Intra College Symposium TESLA2K18 was launched by the chief guest.

On 18/09/2018 [Tuesday] both the technical and non-technical events were conducted. Technical events such as DE-Paper, Decathlon, I am a Hustler and True Inventor and Non-technical events such as Best Manager , Sherlock Holmes and Tik-Tik-Tik were conducted.

DE-Paper was held on 18/09/18 at Old Computer Lab from 10:30AM to 11:30AM the judges are Dr.M.Ravindran Associate Professor and Mr.T.Sivakumar, Assistant Professor, The event provides a chance to share your knowledge and toothier technical stuffs and to improve their knowledge. Student's volunteers are Viswanath, Jebisha Gnadebham, Sindhu Muhila, Mafin Rijoe, Priya Dharshini, Angelin Anu, Gandhi Ram and Amirtha.

Decathlon was held on 18/09/18 at Seminar Hall from 02:00PM to 03:00PM under the supervision of Dr.S.Senthil Kumar, Assistant Professor (S.G) and Ms.O.Supriya, Assistant Professor. This event combines of both technical and non-technical events. The volunteer's for conducting the event are Arun Kumar, Rishika, Naga Arjun, Iswarya, Amarnath, Nalla Selva Prakash, Muralitharan, Siva Balaji, Boominathan, Suriya Ambika, Smivel Subash, Aarthi, Gowthaman, Shanmuga Sundar.

I am a Hustler event was held on 18/09/18 at Hall H5 from 11:00AM to 12:00PM. the supervisor for the event is Mrs.P.Jothsna Praveena, Assistant Professor and Mr.N.Sankar, Assistant Professor. The event develops focused, optioned, curious and intense to students. The students volunteers for conducting the event are Aravindhan, Ariharan, Anitha, Siva Sorna Ram, Subash, Lella Nivashini, Menaka, Niferlin, Karthikeyan, Ganthi Muthu.

True Inventor was held on 18/09/18 at Hall H6 from 02:30PM to 3:30PM. The judges for the event are Mr.F.Antony Jeffrey Vaz, Assistant Professor and Ms.A.M.Diffni Gomez, Assistant Professor. The event aims to make participant to alter the existing invention or converting unrefined to refine. The student's volunteers for assisting the event are Nithya Shree, Muniraj, Sree Vidhya and Aarthi Lakshmi

Best Manager was held on 18/09/18 at Seminar Hall from 3:30PM to 4:30PM, The judges for the competition are Mr.K.Kumar, Assistant Professor and Ms.J.Vinotha, Assistant Professor. This event makes the student to increase the confidence, positive, happy, well planned, calculative, intuitive best manager. The students volunteers for conducting the event are Ranjitha, Priya Dharshini, Sindhu, Vijay Shanmugam, Nivedha, Dharshini, Aruna, Kanthari, Mugesh, Hariharan..

Sherlock Holmes was held on 18/09/18 at Hall H5 from 02:00PM to 3:00PM. The instructors for the workshop are Mrs.K.Gowthami, Assistant Professor and Mr.M.Bakrutheen, Assistant Professor. The event aims to make the participant to involve in business. The student's volunteers for assisting the event are Pavithra, Kartheswaran, Siva, Meenakshi, Poorna Pushkala, Dhanapal Raj, Gomathi Prabha, Iswarya, Mahadevan, Gopinath and Karthick.

Tik-Tik-Tik was held on 18/09/18 at Seminar Hall from 11:30AM to 12:30PM. The instructors for the workshop are Mr.M.Sivapalanirajan, Assistant Professor and Ms.E.Anitha, Assistant Professor. The event makes the participant to recognize life is short to experience everything in this world. The student volunteers for conducting the event are Surendran, Divya, Ramalakshmi, Siva Shankar, Abinaya, Vinitha, Swetha, Kabilan, arumugaraj, Logeshwarabalan and Subaragavan

The valedictory function was conducted at EEE Seminar Hall by 4.30PM. Feedback of participant's session was there and internal participants have given their feedbacks. Then prize was distributed to the winners of several events by Dr.M.Willjuice Iruthayarajan, HOD/EEE, and Dr.N.B.Prakash EEE Association Coordinator, National Engineering College.

INSTRUMENT SOCIETY OF INDIA (ISOI) - TECHQUEST

ISoI members of final year EEE students organized ***TECHQUEST*** event for third and final year students under ISoI student chapter on 10th, 11th and 14th September 2018. 31 teams (2 per team) of ISoI members from second and third year EEE and EIE department participated in the events.

The first round of the event is technical quiz which was conducted in EEE seminar hall on 10/09/2018 and 11/09/2018. Top 10 teams from second and third year were shortlisted for the next round which is technical crossword and connections. The second and third rounds were conducted in elective halls of EEE on 14/09/2018. The winners of the events are

S. No.	Name	Year/ branch	Prize	No.	Name	Year/ branch	Prize
1.	T. Aathi	II EEE	**First**	4.	R.Ramesh kumar H.Iraimuhil	III EIE	**First**
2.	K.Adchaya S.T.Bala akalya	II EEE	**Second**	5.	S.Nivas Shankar K.M.Balaji	III EIE	**Second**
3.	K.Guru saravana moorthy T.A.Arunachalan	II EIE	**Third**	6.	S.Arjun L.Naveen	III EIE	**Third**

Coordinator: AASHA.A (IV EEEA)

Organizing committee:

No.	Name	No.	Name
1.	GURUNATHAN C	1.	MUTHU RAM .C .K
2	GURU SUBRAMANIAN.P	2	MUNIRAJ.S
3	JOTHIBASU.M	3	VEERAPUTHIRAN.E
4	KARAN.M	4	YOGESH.K

SPECIAL INTEREST GROUP

POWER ELECTRONICS & DRIVES

A Hands-on training session on "***Simulation of Power Converters using PSIM***" was conducted on 01.09.2018 by **Mr. S.Sankarakumar**, Assistant Professor (S.G) /EEE. Time: 10.10 AM to 12.50 PM at New Computer Lab, for Power Electronics Special Interested Group (SIG) members. The objectives of the session were:

- To impart exposure of recent power converters in the field of power electronics and various simulation tools used for power converter simulation.
- To provide exposure in simulation of various power converters for analyzing the output and input parameters for different types of loads.

Initially, he gave a brief history on different types of converters and various simulation tools used. In that session, he demonstrated the following experiments with PSIM simulation tool:

- Single phase Full bridge controlled & uncontrolled rectifier (for R,RL,RLE loads)
- Three phase inverter (180 & 120 degree conduction mode)
- Single phase voltage controller (for R, RL load)

In each converter, the measurement of average, RMS voltage & FFT analysis were also discussed. 18 students from third year were participated and done the simulation based experiments

POWER & ENERGY

The objectives of the session are:

- To discuss about fundamental concept in Electrical Engineering.
- To discuss about Energy saving methods and its importance.
- To solve the real time problems in Industries.

The Sessions were handled by **Dr. M. Ravindran, Associate Professor (SG)/EEE**

Session-I (10.30AM – 11.30PM)

A general introduction about Basic Electrical elements was given and then the following topics are covered in the session

- Active and Passive Elements.
- Generation of A.C voltage waveform.
- Real time working principles of motors and Generators.

Session-II (11.30AM – 01.00PM)

The session II was continued after a 15minutes break around 11.30AM. The topics in this session cover,

- Solve the real time problems in Domestic Electrical Appliances (Energy savings in Lighting).
- Solve the real time problems in Industrial Electrical Appliances (Energy savings in Motor).
- Solve the power factor improvement in Industrial Electrical Appliances

The sessions were started by 10.30 AM and completed by 01.00 PM. Totally 20 students were participated.

HIGH VOLTAGE ENGINEERING

A session on "**Design Aspects of Power Transformer**" and "**Fundamentals of Liquid Dielectrics**" was conducted on 01.09.2018 by **Ms. T. Bavisha**, AP /EEE and **Mr. M. Bakrutheen**, AP /EEE respectively at EEE Hall H2 for Special Interested Group (SIG) members.

The objectives of the sessions were:

- To give idea on the importance of power transformers and designing of insulator and conductors based on the rating of transformers
- To impart importance of liquid insulating medium in high voltage apparatus
- To provide fundamentals and development in the field of liquid insulating medium

Session I-(10.30 AM – 12.00 PM)

In first session, **Ms. T. Bavisha** gave the lecture about the designing of power transformer in the following topics.

- Evolution of transformers over the years
- Constructional details of transformers
- Over voltages impinging on the transformers
- Insulation design of transformers
- Short circuit behavior transformers
- Design of transformer windings

Session II-(12.00 AM – 01.00 PM)

In second session, **Mr. M. Bakrutheen** gave a brief history on liquid insulation and its development. In this session, he gave the lecture in the following aspects.

- Necessity of Liquid Insulation in the high voltage apparatus
- Development in Liquid Insulation over the years
- Critical properties of Liquid Insulation – Importance, Standards and measurement techniques OF properties such as breakdown voltage, flash point, viscosity, acidity, moisture content, interfacial tension, loss factor and volume resistivity.
- Lustration of monitoring techniques to study the quality of liquid insulation such as Dissolved gas analysis (DGA) and Furan analysis using HPLC and using UV spectroscopy
- Enhancement of liquid insulation with Nanoparticles and Antioxidant
- Cryogenic liquids

After that they have discussed about the recent trends and ongoing research the high voltage fields. They have suggested some of the area in transformer design and liquid dielectric for mini/main project.

The sessions was started by 10.00 AM and completed by 1.00 PM. Totally 14 students from third were participated and got the relevant information.

EMBEDDED SYSTEMS

The objectives of the session are:

- To give an outline about industrial revolutions.
- To know the roles of embedded technology used in industry.
- To discuss the recent trends in Industry 4.0
- To understand the major roles of workers in industry 4.0.

- Impact of Industry 4.0 in batch manufacturing and product development.

A general introduction about automation through embedded processors was delivered by **Mr.F.Antony Jeffrey Vaz, Assistant professor/EEE**. He explained about,

- Basic outline of automation and importance of automation in industry.
- Modern trends and aspects in industry 4.0 and Digital Twin used to monitor the D11 Turbine.
- Applications of automation and AI in industry.
- AI impact in future and task of humans.

The session was started by 10.30 AM and completed by 12.00 PM, totally 29 students from second and third year were participated.

HIGH VOLTAGE ENGINEERING

The special interest group of high voltage engineering was held on 15.09.2018. The session was started by **Dr.S.SENTHIL KUMAR, AP (SG)/EEE**), on the topic "**Energy Conversation in Electrical system**", in lecture hall 4 (EEE). He pointed out the necessity of Energy Efficient of Various Technologies in Electrical Systems given below.

- Maximum Demand Controllers
- Automatic Power Factor Controllers
- Intelligent Power Factor Controller
- Energy Efficient Motors
- Energy Efficient pumps
- Energy Efficient fan
- Technical aspects of Energy Efficient Motors
- Soft Starter
- Variable Speed Drives
- Energy Efficient Transformers
- Energy Efficient Lighting Controls.

Then he described a Case study: Thane Municipal Corporation

- Thane Municipal Corporation initiated the project of energy conservation in year 2015 by identifying the area of municipal building, municipal hospital, street lights, pumping station sewage pumping station.
- Rs 12.3 lacs /annum through energy conservation cell awareness program, periodical maintenance program utilization of alternative energy sources, energy generation (methane gas), quality control & use of in house man power TMC obtained the success in all its energy conservation programs For its efforts TMC received first prize in „State Level Award For Excellence In Energy Conservation & Management 'for the year 2016 First prize in National Energy Conservation Award 2016'.

Finally he described the Conclusion as everything what happens in the world is the expression of flow of energy (Electrical) in one of its forms. In development process to cope with increasing energy demands, conservation and energy efficiency measures are two parallel paths.

"It takes ... one hour to promote energy conservation, but think and need only one second to save energy."

EMBEDDED SYSTEMS

A hand on session on "PIC Microcontroller and its Applications" was handled by **Mrs.K.Gowthami, AP/EEE**, on 15.09.2018.

The objectives of the session are:

- Introduction to PIC microcontroller Board
- How to use MPLAB software
- How to download the embedded c code from the system to PIC microcontroller
- Function of I/O Ports
- Connecting I/O ports to LED's
- How to use proteus software for firmware project
- LED Blinking
- Alternate LED blinking
- DC motor control

The session was started by 10.30 AM and completed by 1.00 PM. Totally 25 students from third year were participated and trained to interface external devices to PIC microcontroller.

POWER ELECTRONICS

A Hands-on training session on ***"Simulation of Power Converters"*** was conducted on 15.09.2018 by **Dr.M.P.E.Rajamani, AP (S.G) /EEE**. Time: 10.10 AM to 12.50 PM at New Computer Lab, for Power Electronics Special Interested Group (SIG) members.
The objectives of the session were:

- To impart exposure of recent power converters in the field of power electronics and various simulation tools used for power converter simulation.
- To provide exposure in simulation of various power converters for analyzing the output and input parameters for different types of loads.

Initially, he gave a brief history on different types of converters and various simulation tools used. In that session, he demonstrated the following experiments with PSIM simulation tool:

- Single phase Full bridge controlled & uncontrolled rectifier (for R,RL,RLE loads)
- Three phase inverter (180 & 120 degree conduction mode)
- Single phase voltage controller (for R, RL load)

In each converter, the measurement of average, RMS voltage & FFT analysis were also discussed. 18 students from third year were participated and done the simulation based experiments.

ETAP TRAINING PROGRAMME

As our EEE department had purchased ETAP student license software we took an initiative to give training on ETAP software to final year students. We organized this training session on every odd Saturday afternoon 2.00 to 4.30pm. 16 students registered for this training. As final year people are busy in placement activities, we managed to take 3 ETAP training sessions covering following topics:

Session 1:

i. Introduction to ETAP.
ii. How to build one line diagram autobuild.
iii. Load flow analysis on one line diagram.

Resource Person: ***Mrs. P.Jothsna Praveena, AP/EEE***

Session 2:

i. How to manage composite networks.
ii. Load flow analysis for composite network and analyzing the behavior of each equipment.
iii. Introduction to short circuit analysis
iv. Application of fault and short circuit analysis

Resource Person: ***Mrs. P.Jothsna Praveena, AP/EEE***

Session 3:

i. Load flow analysis with PQ and PV Bus

Resource Person: ***Ms. O.Supriya, AP/EEE***

MINI PROJECT FORUM

Session 1 [30.06.2018]

MINI PROJECT Forum is functioning in EEE department for motivating students to do mini projects from III semester onwards. Around 180 students of EEE Department are members in the mini project forum of the Department.

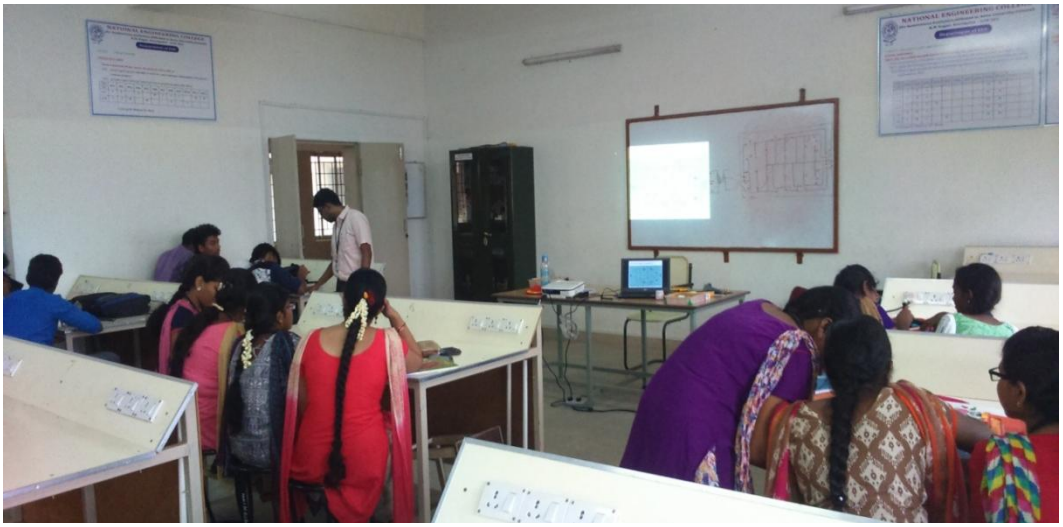

In this connection, a hands on session was conducted on the topic of **"Hands on training on PCB designing and implementation**" by ***Mr.B.Venkatasamy, AP/EEE and Mr.F.Antony Jeffrey Vaz, AP/EEE*** at Microprocessor and Microcontroller Lab of EEE Department on **30-06-2018**. Around **25 students** of second year EEE was participated in the hands-on session. The Session is started with the fundamentals and basic circuits in electronics which is useful for doing projects and about the selection of a project. Then the preparation of Printed Circuit Board (PCB) for some simple circuits such as power supply unit, IR based switch, mini inverter has been discussed. For each batch of students, a simple project circuit has been given and they have completed the PCB of their circuits in the afternoon session. The Students are encouraged to do such type of mini projects continually by the support of this forum

Session 2 [07.07.2018]

The **25 students** actively participated in hands on training on 'making of simple mini projects' conducted by the Mini Project Forum on **07-07-2018** at Microprocessor and Microcontroller Lab. The Students were trained on soldering practice and they soldered their own printed circuit boards and completed their circuit in morning session. Then in afternoon session, they finished PCB boards with wiring and rectified the faults and issues in the circuit boards and all the students experienced a hands-on training on error finding and rectification. The session was guided by Mr.B.Venkatasamy, AP/EEE and Mr.F.Antony Jeffery Vaz AP/EEE.

Other Sessions [21.07.2018, 04.08.2018 and 18.08.2018]

The students used to do mini projects during working Saturdays in the Microprocessor and Microcontroller lab of our department. A Simple Application Oriented projects has been assigned to the students those who are attended in the introduction sessions. The students completed the projects like automatic street light control, Mini inverter, Water level controller; IR based remote controlled electrical apparatus etc. on **21.07.2018, 04.08.2018 and 18.08.2018**. The students are motivated to do more innovative projects with their ideas. The session was guided by Mr.B.Venkatasamy, AP/EEE, Ms. K. Gowthami AP/EEE and Mr. F.Antony Jeffery Vaz AP/EEE.

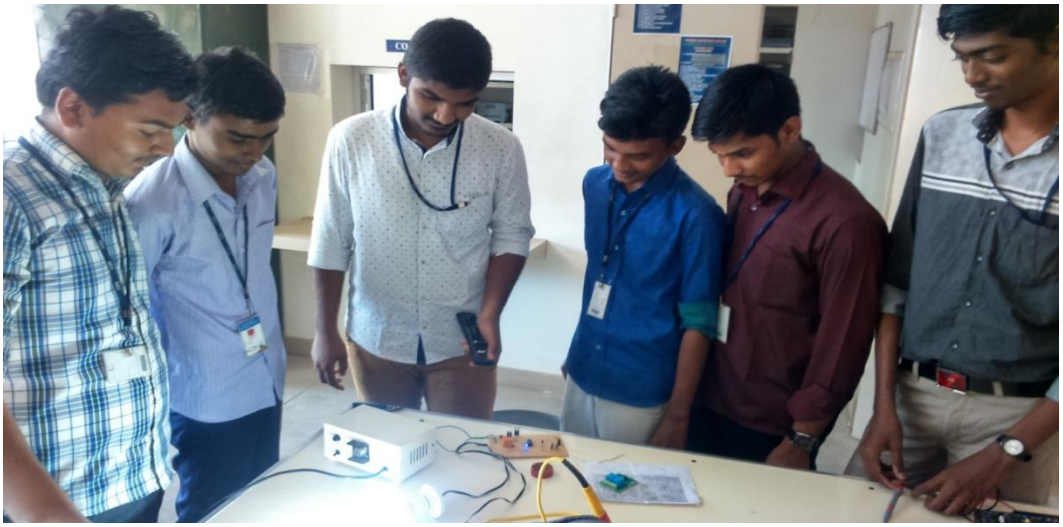

A HANDS ON TRAINING IN AURDINO

EEE department Embedded System Special Interest Group (SIG) conducted a short term training program in Arduino on the topic **"A HANDS ON TRAINNING IN ARDUINO"** for III year students of EEE department. The workshop has been conducted on every odd Saturdays of the academic year of 2017-18. The course was started as a value added course from **07/07/2018** and completed on **29/09/2018** in the Microprocessor and Microcontroller laboratory of the department. Totally **40 students** has participated in the workshop. The content of the training program is given below.

Ex. No	Topic	Date
	Introduction and features of Arduino	07.07.2018
1.	LED and LCD Interfacing using Arduino	
2.	Analog and Digital I/O Interface using Arduino	21.07.2018
3.	DC motor Interfacing [Forward/Reverse]	
4.	GSM sms sending receiving using Arduino	04.08.2018
5.	GSM Call sending using Arduino	
6.	Ultrasonic distance sensor Interfacing	18.08.2018
7.	Servo/Stepper Motor Interfacing	
8.	Obstacle avoidance robot using Arduino	01.09.2018
9.	Line Following robot using Arduino	
10.	Bluetooth interfacing with Arduino	15.09.2018
11.	Bluetooth "APP" development for Android	
12.	IR controlled appliances and interfacing	29.09.2018
13.	IOT application using NodeMCU ESP8266 Wi-Fi Module	

Session 1 *[07/07/2018]*

Mr. B.Venkatasamy AP/EEE and Mr. F. Antony Jeffrey Vaz AP/EEE handled the first session with introduction to Embedded Systems. They explained about the hardware structure of different types Arduino boards compatibility of it. They extended the session with the basic programming concept in C programming and some basic Arduino interfacing such as LED and LCD interfacing. Students were provided with components such as Arduino Uno board, Liquid crystal Display and Light Emitting Diodes. Students are given a task for making running serial LED light and to display their name in the second column center aligned in the display.

Session 2 *[21.07.2018]*

Mr. B.Venkatasamy AP/EEE and Mr. F. Antony Jeffrey Vaz AP/EEE handled the second session about the analog and digital interfacing with arduino. In the next session of the day is continued by Mr. B.Venkatasamy and he explained about the motor driver controller L293D. Then he gave hands on training on the interfacing of the DC motor using L293D for forward/reverse operation.

In this session students are asked to make a simple analog display using Arduino Uno 10bit ADC to read the analog value and to display it in the LCD screen and in the second session students are asked to make use of chassis and driver board from the lab to construct a rover that moves forward and reverse direction.

Session 3 ***[04.08.2018]***

Mr. B.Venkatasamy AP/EEE and Mr. F. Antony Jeffrey Vaz AP/EEE handled the session about the GSM interfacing with Arduino. They explained about the AT commands and programming concepts for the sending/receiving of SMS and sending / receiving of CALL using GSM module. A hands on session was given to the participants for controlling electrical appliances by mobile SMS/CALL. Students are taught to make call to their mobile phone and to send a SMS message to the respective numbers provided in the Arduino coding using SIM900A GSM module. Then students are given a task to receive a message in GSM modem and to control an appliance.

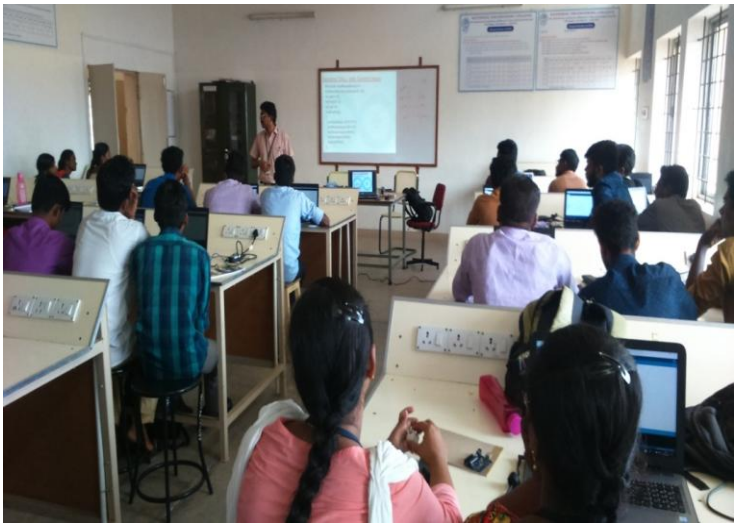

Session 4 [*18.08.2018]*

Mr. B.Venkatasamy AP/EEE conducted the session and he gave the explanation about the principle and operation of ultrasonic sensor module. He demonstrated the interfacing the ultrasonic sensor module with Arduino for distance measurement. The session was continued by Mr. F. Antony Jeffrey Vaz AP/EEE and he explained about the interfacing of stepper motor and Servo motor with Arduino. Recent day more need of distance measurement using autonomous robots is used for self learning of their path and to navigate to the desired locations are upcoming fields. Interfacing of stepper motor and servo motor helps the robot to control their physical position. So this session helped the students to learn more about robotics and they got a deep knowledge in actuators and distance sensors.

Session 5 [01.09.2018]

Mr. F. Antony Jeffrey Vaz handled the session of the workshop and he guided the students to construct a Line Follower robot using Arduino as a controller and Infrared Sensors as sensing device and Motor as actuator, they learned to code by their own and Obstacle Avoiding robot was assembled with the help of the Arduino, ultrasonic distance sensor and DC motor as actuators. All students logically coded their own program for the projects. They finally demonstrated the line following robot and ultrasonic rover by their own code.

Session 6 *[15/09/2018]*

Mr. B.Venkatasamy AP/EEE and Mr. F. Antony Jeffrey Vaz AP/EEE handled the session. Students were taught about developing an Android program using online website called MIT App Inventor, they guided the students in developing an “Android Application (APP)”. Nowadays android devices play a vital role in human life. The developed an “App” will connects with Arduino board with Bluetooth serial interface which can be used in any manually controlled remote system, which can be very useful in Home automation system through any android device. At the end of session, all the session participants developed their own “Android-

Bluetooth App" and they interfaced with the Arduino through Bluetooth module and controlled a relay module which is connected with a test lamp by their own.

Session 7 ***[29.09.2018]***

Mr. B.Venkatasamy AP/EEE started the session and they gave an introduction about the Basics of Internet of Things (IOT), and also explained why IOT is needed in modern days. He also briefed about the future role of IOT platform. He also explained the various modules which can be used for IOT based application in current trends. Then the students were taught with Node MUC Wi-Fi module features, pin diagram and functionalities for simple IOT application. Using 'Blynk' android app from play store students had hands on session for controlling a simple LED through an ON/OFF button. Then the session was continued by fading the LED with the analog output from the Node MCU Module using the android "Blynk App". Then, in the last session was about IR interfacing with Arduino using remote control. The IR receiver is connected with Arduino and a simple LED is made to on/off by pressing the respective button in the remote control assigned in the Arduino program. The Workshop is completed with feedback session on 29.09.2018.

SOCIAL AWARENESS CELL

As a part of Social Awareness cell of EEE department an awareness camp was conducted for Government Arts and Science College, ***Kovilpatti*** on **25.09.2018** in the topic "Electricity usage, conservation and safety". The program was started with welcome address given by Vishnu Moorthi (final year B). Followed by that the session was started by ***Dr.M.Ravindran Asso Prof(SG)/EEE*** with the comparison of renewable and non renewable energy sources and method of thermal power generation. Then he explains the Advantages and disadvantages of thermal power plant like,

Advantages:

- Fuel cost of thermal power plant is relatively low.
- We can produce thermal energy almost everywhere in the world.
- Heat production System is simple compared to other system.
- Overall system cost effective.
- Easy mechanism.

Disadvantages:

- Huge production of Carbon-di-oxide (CO_2) in the atmosphere.
- Exhausted gases harms outside environment badly.
- Low overall efficiency.

Following the session Dr.M.Ravindran Asso Prof(SG) explained the need of renewable energy sources and safety aspects to handle electricity. Final year and third year students play drama related to electricity conservation and safety. Also they put video demonstration to deliver the content to the people. The session was coordinated by ***Dr.M.Ravindran, Asso. Prof(SG)/EEE, Mr.K.Kumar, Asst prof/EEE, Mr.Subburaj***, technician along with lateral entry and NCC volunteers. Around 80 members attend the program and got benefited.

ALUMNI INTERACTION

Mr. M.Saravana Kumar (2018 passed out) came to our college on 25.09.2018. He interacted about CDS conducted by UPSC for the recruitment of Army, Navy and Air force with pre final year students.

He explained about the recruitment procedure. Every year the selection was conducted twice by UPSC. The exam includes General English, Mathematics and Military Aptitude. If CDS is cleared, a five day selection process will be undergone which includes Picture Description, Aptitude, Group Discussion, General Knowledge and Fitness test. If passed in those selections, the posting will be given as CO or IOB officer.

In addition he also enlightened the students about AFCAT recruitment held by Air force. Separate category will be given if having NCC – C Certificate.

M. Subbiah (2016 passed out), now working as "PROJECT ENGINEER" in "NISSI Engineering Solution Private Limited" at Chennai, came to our college on 17.09.2018. He attended an interaction session with final year students. He explained about his working nature in his company. In that company, Design, Erection, Testing and commissioning of Electrical HT/LT equipment, Control Relay Panel, Numerical relays and sub-station automation are done. They provide engineering services related to SCADA & IED integration, sub-station design and Automation. He told, NISSI offers a wide variety of career options based on skill sets, future requirements, and interest shown by the employee. The Opportunities could be performance-based in one's area of specialization, or could be lateral moves based on employee interest and potential trainability. So he advised the students to be skilled in their core subjects. Then he shared his own college experience and how he got this job.

PLACEMENT DETAILS

On behalf of the Chairman, Managing Director, Director, Principal, Head of the Department and staff members, we heartily congratulates the final year students who got placed in the Campus drive in our campus during the month of October 2018

- **Total No. of Students Placed: 13**

Mr.S.SYED MOHIDEEN BATCHA

Mr.P.VIGNESH

Mr.S.SARAVANAUMAR

Mr.S.GOVINDA PRASAD

Ms.K.SANTHIYA LAKSHMI

Ms.D.R.DIVYA

Ms.K.VISHNU PRIYA

VVDN TECHNOLOGIES

Mr.M.MOHAMMED AMJATH KANI

Mr.S.ARIHARAN

Mr.R.ARAVINDHAN

Seven Hills Technology

DATA PATTERNS

Mr.T.SOURABI KRISHNA

Mr. I. RAMESH MOORTHI

cadence

Mr.R.ARAVINDHAN

EXPERIENCE IN FACING INTERVIEWS

Hello everyone. This is ***R. Aravindhan*** from final year. I have been selected as an Intern in the "Analog IC Layout" team at Cadence Design Systems, Bangalore. I would like to share my experience through this medium. In any core (electronics) company the candidates will be assessed mostly in three subjects: "Circuit Theory", "Analog Electronics" and "Digital Electronics". I used the following study materials:

- "Fundamentals of electric circuits" by Charles.K.Alexander and Matthew.N.O.Sadiku for "Circuit Theory"
- "Microelectronic Circuits" by Adel.S.Sedra and Kenneth.C.Smith for "Analog Electronics"

[OR]

- "Integrated Electronics" by Millman and Halkias.
- "Neso Academy" channel in Youtube for "Digital Electronics".

The selection process of the company took 2 days. On day 1 (29/09/2018) 3 rounds took place in our campus. On day 2 (30/09/2018) 4 rounds took place in KLN College of Engineering, Madurai.

- The first two rounds were written tests and the rest were technical face-to-face interviews.
- The first round comprised of 25 questions out of which 15 were technical and 10 were aptitude.It's duration was about 75 minutes.
- The second round comprised of 8 technical questions and its duration was about 40 minutes.
- In the remaining four rounds, I was asked to solve the questions which I hadn't answered in the first round and some questions from other set of question paper.

- ***Mr. R. Aravindhan , Final year/EEE***

GATE CORNER

MRS. P. JOTHSNA PRAVEENA *M.E.*,
ASSISTANT PROFESSOR
ELECTRICAL AND ELECTRONICS ENGINEERING

POWER ELECTRONICS FOR GATE EXAM: A NIGHTMARE FOR ALL ELECTRICAL ENGINEERS

Hi Students, I am writing this article to let you all know, preparation strategy for Power Electronics subject as most of the electrical engineers feel it as tough and tricky subject in GATE. The weightage of this subject in GATE exam generally varies between 8 to 10 marks. Students generally find questions from this topic difficult as the questions that are asked from this subject are not very trivial

How to Study Power Electronics and Get Good Marks

First of all be clear with the fact that in **power electronics** we have to deal with a few concepts only. In order to score good marks in Power Electronics and understand the concepts clearly, I strictly suggest you to own the following textbooks. PS Bimbhra and Power Electronics pdf notes which are available in **NPTEL website**.

Power Electronic Devices:

In this chapter, the first thing that you have to study is the concept of switches. Under this concept, you have to understand the concept of the ideal and practical switch. Also, you need to understand how to compute the losses in a switch such as Conduction Loss and Switching power Loss. Then you have to study the ideal characteristics of power electronic devices. This will enable you to understand how to determine the characteristics of the combination of multiple devices.

Then, you have to start from Power Diode and understand the concept of Reverse Recovery Characteristics which is further carried over to SCR as well. SCR is the most important topic in this chapter and first, you have to understand the construction and working of SCR and the role of the Gate signal. You also have to understand the characteristics of the device i.e the three modes: Forward Conduction Mode, reverse Blocking Mode and Forward Blocking Mode. You also have to study about terms associated with SCR such as Latching Current and Holding Current.

The other topics that you have to study include: Triggering methods of SCR, Protection Techniques employed in SCR and Series and Parallel Connection of SCR. The Triggering Circuits such as UJT circuit are not important from the GATE point of view.

In other devices, you have to get a basic idea about GTO, RCT, TRIAC, Power BJT, Power MOSFET, IGBT etc.

These topics are very well given in Power Electronics Book by PS Bimbhra.

Phase-Controlled Converters:

In rectifiers you have to study about both Single Phase and Three Phase Rectifiers. You have to be cautious in understanding the difference between Half-Wave, Full-Wave and Half-Controlled, Fully Controlled rectifiers. In Single Phase half wave rectifiers you have to study about the nature of different loads such as R-Load, RL-Load, L-Load, RE Load and RLE Load. Based on this you can understand how the output voltage waveform changes when the load on system is changed. In Single Phase full wave rectifier, if you study about Highly inductive Load and Purely Resistive Load then it would be sufficient. But make sure to cover both fully controlled and half controlled converter. Also, understand how to draw the waveforms so that if the circuit is modified in **GATE exam**, you can easily draw the waveform and derive the answer.

In case of three phase converters, you have to study about three phase half wave and three phase full wave converters and again you should focus only on two types of loads i.e. resistive Load and Highly Inductive load. Also, remember the concept of Discontinuous Conduction in three phase converters and understand the firing angle boundary between Continuous and Discontinuous Conduction.

For rectifier, Bimbhra is more than sufficient and one must be cautious about Fourier analysis of every rectifier. Understand the difference between ripple-free load and normal load. 90% of questions will be based on ripple-free load and in that case, if you have all the formulae on fingertips, you can fetch maximum marks. Coming to battery charging problems in rectifiers go through the NPTEL notes & few problems are also there in the textbook.

Choppers:

In Choppers, you need to understand the full operation of Step-Down Chopper and Buck Converter. There are three converters that are included in **GATE course** which are Buck Converter, Boost Converter, and Buck-Boost Converter. In all these three converters you need to understand the general methods of determining certain parameters such as Average Output Voltage, Average Inductor Current, Ripple In Inductor Current, Ripple in Load Voltage etc. These parameters are determined from the basic Network Analysis and concepts of Volt-Sec Balance and Ampere-sec Balance.

The next important concept that you have to study is the concept of Thyristor Commutation Techniques such as Class-A Commutation, Class-B Commutation or Current Commutation, Class-C or Complementary Commutation, Class-D or Voltage Commutation. It would be good if you can understand the working of Commutation Circuits and if it is not possible then you need to remember the expressions of Maximum Thyristor Current and the Circuit Turn-Off Time.

You can also study about different types of choppers such as Type-A Chopper Type-B chopper etc. The main focus of this chapter should be on solving more problems using the basic concepts rather than memorizing the expressions involved.

Inverters:

In the case of Inverters, you have to study about the Single Phase and Three phase Inverters. In single Phase Inverters you have to study about Half Bridge and Full Bridge Inverters. In each type of Inverter you have to understand, how the load current waveform gets affected. You can memorize the Fourier Series for the Output Voltage of each of these configurations.

In Three Phase Inverter, there are two conduction modes which are 120 degree and 180-degree conduction modes. In each of the modes, you should remember the RMS value of Phase Voltages, Line Voltages and RMS Values of their Fundamental Components. You can also take a look at the basic working of Current Source Inverter and its variation in Auto Sequential Commutated Inverter (ASCI).

Then comes the most important topic now a days which is Pulse Width Modulation (PWM). Earlier the most important PWM technique was Single Pulse Modulation (SPM), so you can memorize the RMS voltage output of this technique. Also, try and memorize the Fourier Series of Output Voltage of this technique as many questions have been asked on this in the past. The next modulation technique is Multiple Pulse Modulation (MPM) but questions have not been asked from it. Nowadays, the most popular technique is Sinusoidal Pulse Width Modulation (SPWM) and here you need to remember a basic expression for peak value of Fundamental component of Output Voltage.

TIME TO KNOW OUR ALUMNI

T.MUNEESWARA PANDIAN, **(1997- 2001 EEE/NEC Batch)**

Senior Section Engineer (Electrical),

Southern Railway,

Sengottai – 627 809,

Tirunelveli District.

Mobile No : 94425 46857

Mail id : munees2001@gmail.com

- **Year 2001 :** Passed out in EEE Department of National Engineering College
- **Year 2003 :** Undergone Training at TNEB/Tirunelveli as Graduate Apprentice Trainee
- **Year 2004 :** Worked at Lakshmi Ammal Polytechnic College/K.R. Nagar as Lecturer/EEE
- **Year 2005 :** Joined at Southern Railway as Junior Engineer(Electrical)
- **Year 2013 :** Promoted as Sr. Section Engineer (Electrical) in Southern Railway and continued

---

Nature of Work: Performed Maintenance of Distribution Transformers, HT/LT side Electrical Maintenance including all Electrical Installations comes under Electrical (General Services) in Railways.

STUDENT ARTICLES

DIGITAL PEN

A digital pen or smart pen is an input device which captures the handwriting or brush strokes of a user and converts handwritten analog information created using "pen and paper" into digital data, enabling the data to be utilized in various applications. This type of pen is usually used in conjunction with a digital notebook, although the data can also be used for different applications or simply as a graphic.

In this pen there is an ink refill which leaves an ink trail on the page. The infrared LED in the base of the pen shines onto the page. You can't see it because your eyes can't detect infrared. The light detector, also in the base of the pen, picks up the infrared reflected off recognition marks printed on the special paper. The microchip in the pen uses the pattern of reflections to store images of the words you're writing. The Bluetooth antenna built into the pen transmits the stored data wirelessly and invisibly through the air. The wireless receiver in your computer picks up the Bluetooth signals and stores what you've written. Software in the PC converts this data into normal, editable text you can import into a word-processing program.

A digital pen is generally larger and has more features than an active pen. Digital pens typically contain internal electronics and have features such as touch sensitivity, input buttons, memory for storing handwriting data and transmission capabilities. The input device captures the handwriting data that once digitized, can be uploaded to a computer and displayed on its monitor.

Some pens are equipped with a digital recording device that allows users to use them as intelligent Dictaphone

- ***Mr. A.G.Naveen Kumar, Third Year, B sec***

-

SPHERICAL SILICON SOLAR CELL

An unique photovoltaic/electrochemical solar energy storage system utilizing silicon spheres as the individual photovoltaic elements is being developed at Texas Instruments. A new technology has been developed to produce high-purity single-crystal silicon. Silicon particles approximating spheres can be produced by forcing molten silicon through a small diameter nozzle. Due to flow instabilities and surface tension, the small jet of molten silicon quickly disrupts into small droplets. The molten drop- lets are then allowed to solidify in free fall and are collected at the bottom of a sufficiently long enclosure. The silicon melt is contained in a quartz tube that has been pulled down to a nozzle. The internal diameter of the nozzle ideally would be about two thirds of the desired sphere size, but to compensate for frequent coalescence of molten droplets the nozzle diameter is typically less than 75 pm. The spheres produced by this process typically have diameters between 250 pm and 500 pm.

In the Texas Instruments solar energy system (TISES), the arrays of spherical silicon cells are used to electrolyze hydro- bromic acid (HBr) for direct storage of the available electrical output as chemical energy. The sphere arrays are the primary component of the solar chemical converter (SCC). In the SCC, HBr is electrolyzed to produce hydrogen gas and bro- mine. The hydrogen is stored as a metal hydride in a calcium-nickel alloy and the bromine is stored in solution. The stored chemical energy can be used on demand by reacting hydrogen and bromine in the fuel cell to produce electrical energy and HBr which is again routed to the SCC to complete the loop. Excess thermal energy can also be extracted from the elctrolyte as low grade heat. A diffused layer is formed over the entire surface of the silicon sphere. Both p- and n-type spheres are used in the SCC array. The dopant source is BBrs for the boron diffusion into the n-type spheres, and POCl, is used as a phosphorous source for p-type sphere diffusions. A tubular-shaped diffusion boat is used to rotate the spheres during deposition to ensure uniform dopant glass coverage. The junction depth is typically 0.5 to 0.8 pm; but junction depths as shallow as 0.25 pm have been evaluated. An oxide layer must be grown or deposited on the sphere surface prior to incorporation in the matrix glass. This oxide layer serves as a diffusion barrier to impurities contained in the matrix glass. It also prevents attack of the silicon surface by the glass during the glass firing process. Sufficiently thick thermal oxide layers can be grown on the cells with deeper diffusions. but the oxide layer must be deposited at a lower temperature on shallow junction cells to prevent further penetration of the diffused layer.

In a photoelectrochemical system, spheres have the additional advantage that each cell is independently loaded to its optimum operating point and a small percentage of defects have little effect on overall array performance.

- ***I.Jebisha Gnanadeepam, Final Year, A Sec***

ELECTRONIC PILLS

Doctors can inspect the colon and peer into the stomach using endoscopic instruments. But some areas cannot be easily viewed, and finding out how muscles are working can be difficult. Electronic pills are being used to measure muscle contraction, ease of passage and other factors to reveal information unavailable in the past. It is a medical monitoring system. Measurement parameters of electronic pills include temperature analysis, pH measurements, conductivity and dissolved oxygen. And they can also capture images and sent it into a system. Electronic pills are swallowable. It has a 16mm diameter, a length of 55mm and 5gram weight. This pill is covered by chemically resistant polyether-terketone (PEEK) coating.

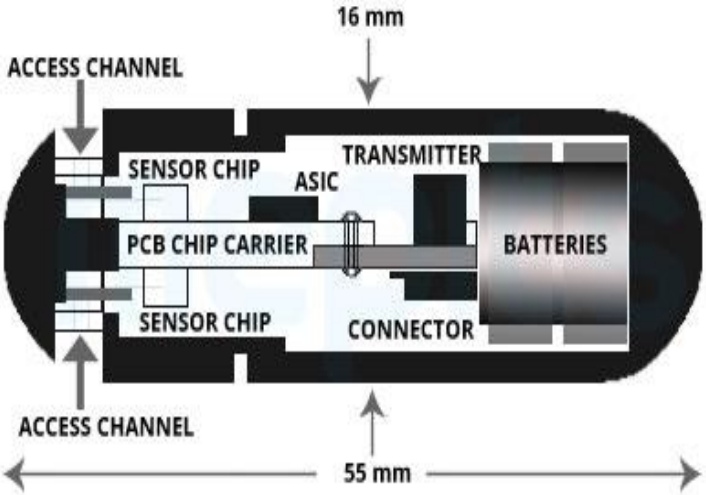

When it moves through gastro-intestinal track it starts to detect diseases and abnormalities. A small electronic pill can easily reach areas such as small intestine and large intestine and can deliver real time information to an external system. Total information will be displayed in a monitor. The electronic pill travels to the digestive system, collects data and sends it into the computer with a distance of 1 meter and more. Main parts of electronic pills are four sensors, an ASIC chip, a radio transmitter and a power source. These new electronic inventions transmit information such as acidity, pressure and temperature levels or images of the esophagus and intestine to your doctor's computer for analysis. Use of electronic pill helps us to easily detect the diseases and can take sudden action against it. This device consists of 4 microelectronic sensors. First one is Silicon Diode: which is used to identify the body temperature. Second one is ISFET (Ion-Sensitive Field-Effect Transistor). ISFET is used for measuring ion concentration in solution. Another one is a Direct Contact Gold Electrode. It helps to measure conductivity. Three-Electrode Electrochemical Cell is the fourth sensor in electronic pill. It is used to calculate rate of dissolved oxygen and identify the activity of aerobic bacteria in small intestine and large intestine

- ***Ms. J. Gomathi Prabhaa, Second Year, A sec***

WIRELESS SENSOR NETWORK IN AGRICULTURE

Wireless sensor network (WSN) refers to a group of spatially dispersed and dedicated sensors for monitoring and recording the physical conditions of the environment and organizing the collected data at a central location. WSNs measure environmental conditions like temperature, sound, pollution levels, humidity, wind, and so on.

A wireless sensor network contains hundreds of thousands of sensor nodes. The sensor nodes can communicate among themselves using radio signals. WSN in agriculture helps to provide distributed data collection, monitoring in harsh environments, precise irrigation and fertilizer supply to produce profuse crop production while diminishing cost and assisting farmers in real time data gathering.

WSN requires a modernized tools and equipment so as to increase the quality, quantity of the product grown with reduction in man power. WSN developed so far are with functions that are suitable to measure the parameters of crop and then are able to perform the connectivity to forward the data to other connecting devices. This method is worked in two strategies they are random and grid topology .sensor nodes at least of 6 nodes and interface the network along with software.

1.Grid topology

A grid topology of 24 sensors with 16m vertical and horizontal distance each. 6 access points that is played role as sink node. First, each of sensors communicates with sink node through wireless network. After that, sink node should transfer real time data to the base station. In addition, we connect each of accesses point to the server using wire and 2 routers.

2. Random topology

A random topology of 24 sensors, that is, distribution in the field with unplanned distance among sensors. The random topology works well with large area. Topologies meet the objective that the condition of a crop in terms of water, pesticides can be alarmed to the farmer at regular intervals. if the conditions are not favorable, then the farmer can be sent for the action, by doing so labor, man power can be saved, it directly relates to the save in economy and power, also the device itself helps in successful growth of a plant.

Different sensors with applications such as measurement of soil moisture, climate condition, water level indicator, the pests or disease monitoring all together available with each sensor as circular topology works best for limited area. As the agriculture crops are with limited area such as vegetables and fruits that can be employed with the circular topology. a variety of topologies for wireless sensor network has been developed and each topology has its own scenario.

Shantha Kumar, III yr - B

TECHNICAL ARTICLE – STAFF MEMBERS

Ms. P. JOE PRISCILLA, M.E.,
Assistant Professor
Electrical and Electronics Engineering

MATRIX CONVERTER

In the last few decades, the use of power converters and high-performance adjustable speed drives has gained an increased presence in a wide range of applications, mainly due to improved performance and higher efficiency, which lead to increased production rates. In this way, power converters and drives have become an enabling technology in most industrial sectors, with many applications in a wide variety of systems. There are many types of power converters and drive systems, and every application requires different specifications that define the most appropriate topology and control scheme to be used.

Power converters are composed of power semiconductor switches and passive components. They can be classified according to several criteria. The category of AC-AC converters namely back to back converters is the traditional converter that consists of an inverter, a rectifier and an intermediate circuit containing a storage element (capacitor or inductance). The storage component is usually bulky, expensive and requires permanent maintenance.

The second category of AC-AC converters is the Matrix converter topology that eliminates the storage element. Its absence helps reduce the volume and the cost of the converter, the cost of its maintenance and increase its life span. The symmetry of the matrix topology allows the transfer of power in both directions and thus a four-quadrant operation Matrix converters are direct frequency converters, generating variable phase voltage amplitude and frequency from three-phase input voltages.

Compared to the conventional converters such as cyclo- converter and rectifier-capacitor-inverter, this topology has the following advantages

-A wide range of operating frequency to the output voltage.
-A variable ratio between the output and input voltage.
-Sine wave of input current, output current and voltage with an adjustable phase shift, so the ability to operate at unity power factor for any load.
-Operation in all four quadrants.
-The absence of a large capacitor for filtering and energy storage, bulky, heavy and susceptible to failure, which reduces the cost and design of the converter.

These advantages make the matrix converter a promising alternative in applications like wind conversions systems and facilitate the integration of it in several area such as aerospace, industries related to marine propulsion, the adjustable speed drive, embedded systems and renewable energy field based wind and fuel cells.

STUDENTS ACHIEVEMENTS

S.No	Name of Students Participated	Sports/Paper Presentation/ Quiz/Workshop	Year	Prize	Duration	Place
1	K.ChermaJeya P.Eswari Prabha M.Leela Nivashini K.Madhumitha S.Sindhu	National level technical symposium	III	-	11.09.2018 to 12.09.2018	Karpagam Institute of Technology,Coimbatore.
	S.A.Ashfeeq Mohamed A.Mahadevan			II		
2	S.Lakshmi Brindha K.Vishnu Priya	Paper Presentation	IV	-	06.09.2018	JP college of Engineering, Tenkasi
3	K.Logeswarabalan S.Kaushik H.Karthikeyan	Zone-18 Men Handball Tournament	III	-	25.09.2018 to 26.09.2018	Dr.Sivanthi Aditanar Engineering college, Tiruchendur
4	S.Karthirvel mari	Zone-18 Men Kabaddi Tournament	IV	-	22.09.2018 to 23.09.2018	Einstein Engineering college, Seethaparapanallur
	G.Manibharathi R.Robinson B.Sonaikumar		III			
5	A.Nagaraj P.Kannan J.Kalyankumar	TCPL Men Cricket Tournament	IV	-	24.09.2018 to 27.09.2018	Ponjesly Engineering college, Nagarkovil
6	A.Nagaraj P.Kannan J.Kalyankumar	Zone – 18 Men Cricket Tournament	IV	-	17.09.2018 to 20.09.2018	Mepco Scelenk Engineering college, Sivakasi
7	S.Vigneshwaran	Zone-18 Men Basketball Tournament	III	-	05.09.2018 to 06.09.2018	National Engineering college, Kovilpatti
8	V.T.Vasanthakumar	Zone – 18 Men Football Tournament	III	-	07.09.2018 to 09.09.2018	Scad College of Engineering, Cheranmahadevi
	J.Vincent Dennis R.Ganesh Prabu T.Ram Mohan M.Dinesh Kumar		II			
9	V.Padmavathi	Zone-18 Women Ball Badminton Match	IV	-	11.09.2018 to 12.09.2018	VOC College of Engineering, Tuticorin
10	S.Sivakumar D.Vishnumoorthy **R.Balaji**	Zone – 18 Men Athletic m eet	IV	- - **Decathlon 3rd**	27.09.2018 to 29.08.2018	Mepco Schlenk Engineering college
	M.Dinesh Kumar		III	-		
	V.Vasanth S.Vishnu M.Kabilan A.Kailash M.Ramkumar		II	**Javelin 3rd** - - - -		

EDITORIAL BOARD

DEPARTMENT OF ELECTRICAL AND ELECTRONICS ENGINEERING